RIKÄ
QUALITY GUARANTEED.

Owner's Operating Manual
Model No: RK40HIWF1

RK40V
BRUSHLESS TECHNOLOGY

Cordless Impact Wrench

IMPORTANT! PLEASE READ THESE INSTRUCTIONS CAREFULLY. NOTE ALL SAFETY INSTRUCTIONS AND WARNINGS. USE THE PRODUCT CORRECTLY AND WITH CARE FOR THE PURPOSE FOR WHICH IT IS INTENDED. FAILURE TO FOLLOW THESE INSTRUCTIONS MAY CAUSE DAMAGE TO PROPERTY AND/OR PERSONAL INJURY.

KEEP THESE INSTRUCTIONS SAFE AND AVAILABLE FOR FUTURE REFERENCE.

Certificate of Guarantee

This product is guaranteed for a period of 1 year, with effect from the date of purchase and applies only to the original purchaser. The warranty can be extended a further 2 years by registering the purchase on **rikapowertools.com** within 30 days of purchase. This guarantee applies to defects arising from, defective materials or faulty workmanship that become evident during the guarantee period only and does not include consumable items. The manufacturer will either repair or replace the product at their discretion, subject to the following.

That the product has been used in accordance with the guidelines as detailed in the product manual and that it has not been subject to misuse, abuse or used in a purpose for which it was not intended. That it has not been taken apart or tampered with in any way whatsoever or has been service by unauthorised persons or has been used for hire purposes.

Transit damage and accessories are excluded from this guarantee.

Claims made under this guarantee must be made directly to Customer Service:
01332 576 850 within the guarantee period. Receipt and proof of purchase required.

The manufacturer shall not be liable for any special, exemplary, direct, indirect, incidental or consequential loss or damage under this guarantee.

Introduction

Thank you for purchasing this product which has passed through our extensive quality assurance process. Every care has been taken to ensure that it reaches you in perfect condition. However, in the unlikely event that you should experience a problem, or if we can offer any assistance or advice please do not hesitate to contact our customer service.

Safety First
Before attempting to operate this product the following basic safety precautions should always be taken to reduce the risk of fire, electric shock and personal injury. It is important to read the instruction manual to understand the application, limitations and potential hazards associated with this product.

After-Sales Service

Should you require any further assistance regarding your product or in the unlikely event of a defect occurring, please contact us at **rikapowertools.com**. When contacting us, be ready to provide the product Model No: and the serial number found on the product.

Intended Use

The machine is intended for tightening and loosening nuts and bolts within the respective range of dimension.

Any other application beyond the conditions established for use will be considered misuse. RIKA accepts no responsibility for improper use of this product.

Important Safety Instructions

Due to continued product refinement policy, product features and specifications can and will change without notice.

Check current features and specifications with your retailer.

The purpose of safety rules is to attract your attention to possible dangers. The safety symbols and the explanations with them, require your careful attention and understanding. The safety warnings do not by themselves eliminate any danger. The instruction or warnings they give are not substitutes for proper accident prevention measures.

SAFETY ALERT SYMBOL

Indicates danger, warning, caution or notice. May be used in conjunction with other symbols or pictures.

DANGER indicates a hazardous situation which, if not avoided, will result in death or serious injury.

WARNING indicates a hazardous situation which, if not avoided, could result in death or serious injury.

CAUTION indicates a hazardous situation which, if not avoided, could result in minor or moderate injury.

NOTICE indicates information considered important, but not hazard-related (e.g., messages relating to property damage).

Failure to obey a safety warning can result in serious injury to yourself or to others. Always follow the safety precautions to reduce the risk of fire, electric shock and personal injury.

Do not attempt to operate this tool until you have read thoroughly and completely understood the safety rules, etc. contained in this manual. Failure to comply can result in accidents involving fire, electric shock or serious personal injury. Save this Owners Operating Manual and review it frequently for continual safe operation and for instructing others who may use this tool.

SPECIFIC SAFETY INSTRUCTIONS

WARNING! Read and understand all instructions. Failure to follow all instructions listed below could result in electrocution, fire, and/or explosion, which can cause death or serious injury.

Operations for which the power tool was not designed may create a hazard and cause personal injury.

Do not use accessories which are not specifically designed and recommended by the tool manufacturer. Just because the accessory can be attached to your power tool, it does not assure safe operation.

The product is not intended for use by children or persons with reduced physical, sensory, or mental capabilities, or lack of experience and knowledge.

Children should be adequately supervised to ensure they do not play with the product.

WARNING! Some dust particles created by power sanding, sawing, grinding, drilling and other construction jobs contain chemicals known to cause cancer, birth defects or other reproductive harm. Some examples of these chemicals are:

- Lead from lead-based paints.
- Crystalline silica from bricks and cement and other masonry products.
- Arsenic and chromium from chemically treated timber.

Important Safety Instructions

WARNING! If you suspect that paint on surfaces in your home contains lead, seek professional advice. Lead based paints should only be removed by a professional and you should not attempt to remove it yourself. Once the dust has been deposited on surfaces, hand to mouth contact can result in the ingestion of lead. Exposure to even low levels of lead can cause irreversible brain and nervous system damage. Young and unborn children are particularly vulnerable.

Do not expose to rain or water.

Wear hearing protection when necessary. Exposure to noise can cause hearing loss.

WARNING! The operation of any power tool can result in foreign objects being thrown towards your eyes, which could result in severe eye damage. Before beginning power tool operation, always wear safety goggles or safety glasses with side shield or a full face shield where needed.

Personal protective equipment suitable for the work being carried out should be worn. Personal protective equipment should include, suitable work gloves, ear protection, eye protection, respiratory protection and steel toe cap shoes or boots.

SAFETY WARNINGS SPECIFIC FOR IMPACT WRENCHES

Hold the power tool by insulated gripping surfaces, when performing an operation where the fasteners may contact hidden wiring. Fasteners contacting a "live" wire may make exposed metal parts of the power tool "live" and could give the operator an electric shock.

Wear ear protectors during use. Exposure to noise can cause hearing loss.

Check the impact socket carefully for wear, cracks or damage before installation.

Hold the tool firmly when operating. This helps maintain tool stability and keeps hands away from the work area.

If this machine is to be used when working at height, a suitable, stable platform or scaffold tower with hand rails and kick boards should be used. Be sure no one is below when using the tool in high locations.

Always be sure you have a firm footing.

Do not touch the impact socket, bolt, nut or the workpiece immediately after operation. They may be extremely hot and could burn your skin.

Do not attempt to modify the machine or its accessories in any way.

Do not force the machine, let the machine do the work. This will reduce the wear on the machine and bit and increase its efficiency and operating life.

Ensure the trigger is in the locked position when not in use and before installing the battery. Do not carry the tool with your finger on the On/Off trigger, whether the battery is installed or not.

Keep hands away from rotating parts.

WARNING! Impact wrenches are not torque wrenches. DO NOT use this tool for tightening fasteners to specified torques. An independent, calibrated torque measurement device such as a torque wrench should be used when under tightened or over tightened fasteners can lead to the failure of the joint.

Important Safety Instructions

ADDITIONAL SAFETY INSTRUCTIONS FOR BATTERIES

Only use the following batteries and chargers with this tool.

RIKA 2000mAh Li-Ion Battery: RK40B2
RIKA 4000mAh Li-Ion Battery: RK40B4
RIKA 4000mAh Li-Ion Battery: RK40TB4

RIKA 2.4A Fast Charger: RK40FC2
RIKA 4.0A Fast Charger: RK40FC4
RIKA 4.5A Dual Fast Charger: RK40DFC4

Battery packs are shipped in a low charge condition. You should charge a battery pack fully before use.

Do not incinerate a battery pack even if it is seriously damaged or can no longer hold a charge. A battery pack can explode in a fire.

A small leakage of liquid from the battery pack may occur under extreme usage or temperature conditions. This does not necessarily indicate a failure of the battery pack. However, if the outer seal is broken and this leakage comes into contact with your skin wash the affected area quickly with soap and water. If the leakage gets in your eyes flush your eyes with clean water for a minimum of 10 minutes and seek immediate medical attention.

Never attempt to open a battery pack for any reason. If the plastic housing a battery pack breaks open or cracks, immediately discontinue its use and do not recharge it.

Do not store or carry a spare battery pack in a pocket or toolbox or any other place where it may come into contact with metal objects. The battery pack may be short-circuited causing damage to the battery pack, burns or a fire.

CHARGING BATTERIES

When charging a new battery pack it should be fully discharged followed by a full charge for the charging rate for the battery as stated in its product manual plus 30 minutes. This should then be followed by a full discharge and a further full charge for the charging rate for the battery as stated in its product manual plus 30 minutes. This procedure will condition the battery and equalise the cell voltages. Following this procedure will ensure the optimum operation of the battery.

When repeatedly using a charger to charge a number of batteries always allow the charger to cool down before charging another battery. It is recommended that the cooling down period is not less than 30 to 45 minutes.

When charging a battery that has been discharged during heavy use allow the battery to cool down before charging. It is recommended that the cooling down period is not less than 30 to 45 minutes.

Battery packs need to be recharged with a reasonable amount of care, largely because they can be damaged by overcharging.

Overcharging can result in the battery temperature and internal pressure to rise rapidly. This can cause the cells to distort and lose electrolyte, and in extreme cases where the internal pressure is extremely high they can even explode.

This situation can also arise when an overcharged battery is fitted to the product and is being used. In order to avoid this extreme situation it is of vital importance that NiCad and/or Li-Ion batteries are fully discharged before charging and that the charge time is not exceeded except when “Conditioning” a new battery. Repeated charging of partially discharged batteries could cause failure of one or more of the cells.

SELF DISCHARGE

A lithium battery can self discharge and lose its stored charge. Typically it can lose approximately 5% of its charge in the first month after fully charging (when stored at

room temperature), and then loses it by a further 3% per month. When stored at higher temperatures the self discharge rate will be accelerated.

BATTERY CHARGING INDOORS

Chargers are designed to be used indoors. We do not recommend that chargers are used inside your home. Ideally batteries should be charged on a bench in a workshop, garage or shed. If the charging operation is to be carried out in your home the area must be well ventilated and the charger must be placed on a non combustible surface ensuring that the ventilation slots are not blocked.

Never exceed the charging time except when “Conditioning” a new battery, as this could damage a battery and charger.

BATTERY DISPOSAL

When a battery fails to charge or maintain its charge, its usable life is exhausted. To preserve natural resources, please recycle or dispose of a battery pack properly. Before disposal ensure that the battery pack is fully discharged by operating your cordless product, then remove the battery pack from the tool housing and cover the battery pack connections with heavy duty tape, to prevent short circuit and energy discharge which could result in a fire. Do not attempt to open or remove any of the components.

Consult your local waste authority for information regarding available recycling and / or disposal options.

SPECIFIC SAFETY INSTRUCTIONS

RE-CHARGEABLE BATTERIES

Batteries may leak or explode if not charged or handled correctly. Always observe the following precautions when handling batteries. Ensure that the machine is switched off before removing or fitting batteries.

Do not use a battery with any other product that is not recommended.

Do not attempt to fit a battery the wrong way round.

Do not short out, or attempt to dismantle a battery.

Do not expose a battery to flames or excessive heat.

Do not immerse in or expose a battery to water.

Do not store or transport a battery with loose metal objects such drill and driver bits.

Batteries are prone to leakage when discharged. To avoid damage to the product, remove or re-charge the battery when no charge remains. Store the battery in a cool place when not in use.

After prolonged use a battery may become hot. Before removing a battery, switch the machine off and allow the battery to cool down. Do not use the battery if you notice any discolouration or distortion of the battery casing.

RESIDUAL RISKS

Even when the unit is used as prescribed it is not possible to eliminate all residual risk factors. The following hazards may arise in connection with the unit’s construction and design:

1. Damage to hearing caused by noise. Wear suitable hearing protection and limit exposure.
2. Injury to the eyes. Wear protective eye shields or goggles when using the product.
3. Injury caused by vibration. Limit exposure. Follow the instructions in Risk Reduction.
4. Electric shock caused by contact with hidden wires. Hold the product only by insulated services.

Important Safety Instructions

5. Injury caused by dust. Dust created by operating the product can cause respiratory injury. Wear appropriate dust control mask with filters suitable for protecting against particles from the material being worked on.

RISK REDUCTION

It has been reported that vibrations from handheld tools may contribute to a condition called Raynaud's Syndrome in certain individuals. Symptoms may include tingling, numbness, and blanching of the fingers, usually apparent upon exposure to cold.

Hereditary factors, exposure to cold and dampness, diet, smoking and work practices are all thought to contribute to the development of these symptoms. There are measures that can be taken by the operator to possibly reduce the effects of vibration:

Keep your body warm in cold weather. When operating the unit, wear gloves to keep the hands and wrists warm.

It is reported that cold weather is a major factor contributing to Raynaud's Syndrome.

After each period of operation, exercise to increase blood circulation.

Take frequent work breaks. Limit the amount of exposure per day.

If you experience any of the symptoms of this condition, immediately discontinue use and see your doctor about these symptoms.

WARNING! Injuries may be caused, or aggravated, by prolonged use of a tool. When using any tool for prolonged periods, ensure you take regular breaks.

WARNING

This unit produces an electromagnetic field during operation. This field may under some circumstances interfere with active or passive medical implants. To reduce the risk of serious or fatal injury, we recommend persons with medical implants to consult their physician and the medical implant manufacturer before operating this unit.

GENERAL SAFETY RULES

WARNING! Read all instructions Failure to follow all instructions listed below may result in electric shock, fire and/or serious injury. The term "power tool" in all of the warnings listed below refers to your mains operated (corded) power tool or battery operated (cordless) power tool.

SAVE THESE INSTRUCTIONS

1) WORK AREA

a) **Keep work area clean and well lit.** Cluttered and dark areas invite accidents.

b) **Do not operate power tools in explosive atmospheres, such as in the presence of flammable liquids, gases or dust.** Power tools create sparks which may ignite the dust or fumes.

c) **Keep children and bystanders away while operating a power tool.** Distractions can cause you to lose control.

2) ELECTRICAL SAFETY

a) **Power tool plugs must match the outlet. Never modify the plug in any way. Do not use any adapter plugs with earthed (grounded) power tools.** Unmodified plugs and matching outlets will reduce risk of electric shock.

b) **Avoid body contact with earthed or grounded surfaces such as pipes, radiators, ranges and refrigerators.** There is an increased risk of electric shock if your body is earthed or grounded.

Important Safety Instructions

c) **Do not expose power tools to rain or wet conditions.** Water entering a power tool will increase the risk of electric shock.

d) **Do not abuse the cord. Never use the cord for carrying, pulling or unplugging the power tool. Keep cord away from heat, oil, sharp edges or moving parts.** Damaged or entangled cords increase the risk of electric shock.

e) **When operating a power tool outdoors, use an extension cord suitable for outdoor use.** Use of a cord suitable for outdoor use reduces the risk of electric shock.

f) **If operating a power tool in a damp location is unavoidable, use a residual current device (RCD) protected supply.** Use of an RCD reduces the risk of electrical shock.
NOTE: The term “residual current device (RCD)” can be replaced by the term “ground fault circuit interrupter (GFCI)” or “earth leakage circuit breaker (ELCB)”.

3) PERSONAL SAFETY

a) **Stay alert, watch what you are doing and use common sense when operating a power tool. Do not use a power tool while you are tired or under the influence of drugs, alcohol or medication.** A moment of inattention while operating power tools may result in serious personal injury.

b) **Use personal protective equipment. Always wear eye protection.** Safety equipment such as dust mask, non-skid safety shoes, hard hat, or hearing protection used for appropriate conditions will reduce personal injuries.

c) **Prevent unintentional starting. Ensure the switch is in the off-position before connecting to power source and/or battery pack, picking up or carrying the tool.** Carrying power tools with your finger on the switch or energising power tools that have the switch on invites accidents.

d) **Remove any adjusting key or wrench before turning the power tool on.** A wrench or a key left attached to a rotating part of the power tool may result in personal injury.

e) **Do not overreach. Keep proper footing and balance at all times.** This enables better control of the power tool in unexpected situations.

f) **Dress properly. Do not wear loose clothing or jewellery. Keep your hair, clothing and gloves away from moving parts.** Loose clothes, jewellery or long hair can be caught in moving parts.

g) **If devices are provided for the connection of dust extraction and collection facilities, ensure these are connected and properly used.** Use of these devices can reduce dust related hazards.

h) **Do not let familiarity gained from frequent use of tools allow you to become complacent and ignore tool safety principles.** A careless action can cause severe injury within a fraction of a second.

4) POWER TOOL USE AND CARE

a) **Do not force the power tool. Use the correct power tool for your application.** The correct power tool will do the job better and safer at the rate for which it was designed.

b) **Do not use the power tool if the switch does not turn it on and off.** Any power tool that cannot be controlled with the switch is dangerous and must be repaired.

Important Safety Instructions

c) **Disconnect the plug from the power source and/or the battery pack from the power tool before making any adjustments, changing accessories, or storing power tools.** Such preventive safety measures reduce the risk of starting the power tool accidentally.

d) **Store idle power tools out of the reach of children and do not allow persons unfamiliar with the power tool or these instructions to operate the power tool.** Power tools are dangerous in the hands of untrained users.

e) **Maintain power tools. Check for misalignment or binding of moving parts, breakage of parts and any other condition that may affect the power tools operation. If damaged, have the power tool repaired before use.** Many accidents are caused by poorly maintained power tools.

f) **Keep cutting tools sharp and clean.** Properly maintained cutting tools with sharp cutting edges are less likely to bind and are easier to control.

g) **Use the power tool, accessories and tool bits etc., in accordance with these instructions and in the manner intended for the particular type of power tool, taking into account the working conditions and the work to be performed.** Use of the power tool for operations different from intended could result in a hazardous situation.

h) **Keep handles and grasping surfaces dry, clean and free from oil and grease.** Slippery handles and grasping surfaces do not allow for safe handling and control of the tool in unexpected situations.

i) **When using the tool, do not wear cloth work gloves which may be entangled.** The entanglement of cloth work gloves in the moving parts may result in personal injury.

5) BATTERY TOOL USE AND CARE

a) **Recharge only with the charger specified by the manufacturer.** A charger that is suitable for one type of battery pack may create a risk of fire when used with another battery pack.

b) **Use power tools only with specifically designated battery packs.** Use of any other battery packs may create a risk of injury and fire.

c) **When battery pack is not in use, keep it away from other metal objects, like paper clips, coins, keys, nails, screws or other small metal objects, that can make a connection from one terminal to another.** Shorting the battery terminals together may cause burns or a fire.

d) **Under abusive conditions, liquid may be ejected from the battery; avoid contact. If contact accidentally occurs, flush with water. If liquid contacts eyes, additionally seek medical help.** Liquid ejected from the battery may cause irritation or burns.

6) SERVICE

a) **Have your power tool serviced by a qualified repair person using only identical replacement parts.** This will ensure that the safety of the power tool is maintained.

b) **Never service damaged battery packs.** Service of battery packs should only be performed by the manufacturer or authorised service providers.

c) **Follow instruction for lubricating and changing accessories.**

Safety Symbols

Some of the following symbols may be used on this product. Please study them and learn their meaning. Proper interpretation of these symbols will allow you to operate the product better and safer.

SYMBOL	DESIGNATION/EXPLANATION
	Indicates danger, warning or caution. It means attention!!! Your safety is involved.
	Your manual contains special messages to bring attention to potential safety concerns as well as operating and servicing information. Please read all the information carefully to ensure satisfaction and safe use.
	Wear eye, hearing and head protection when operating this equipment.
	Do not expose to rain or use in damp locations.
	Waste electrical products should not be disposed of with household waste. Please recycle where facilities exist. Check with your Local Authority or retailer for recycling advice.
CE UK CA	Conforms to relevant safety standards.

Technical Specification

Rated Voltage:	40V DC
Motor:	Brushless
No Load Speed (Soft):	0-900/min
No Load Speed (Medium):	0-1100/min
No Load Speed (Hard):	0-1400/min
No Load Speed (Max):	0-1700/min
Impact Rate (Soft):	0-1350bpm
Impact Rate (Medium):	0-1700bpm
Impact Rate (Hard):	0-2100bpm
Impact Rate (Max):	0-2500bpm

Anvil Size:	1” (25.4mm) Square
Max. Tightening Torque:	2000Nm
Max. Nut Busting Torque:	2500Nm
Sound Pressure Level:	L_{PA} 89.6 dB(A), K=3dB(A)
Sound Power Level:	L_{WA} 97.6 dB(A), K=3dB(A)
Vibration Level:	13.354m/s², K=1.5m/s²
Weight:	4.75kg

Components & Controls

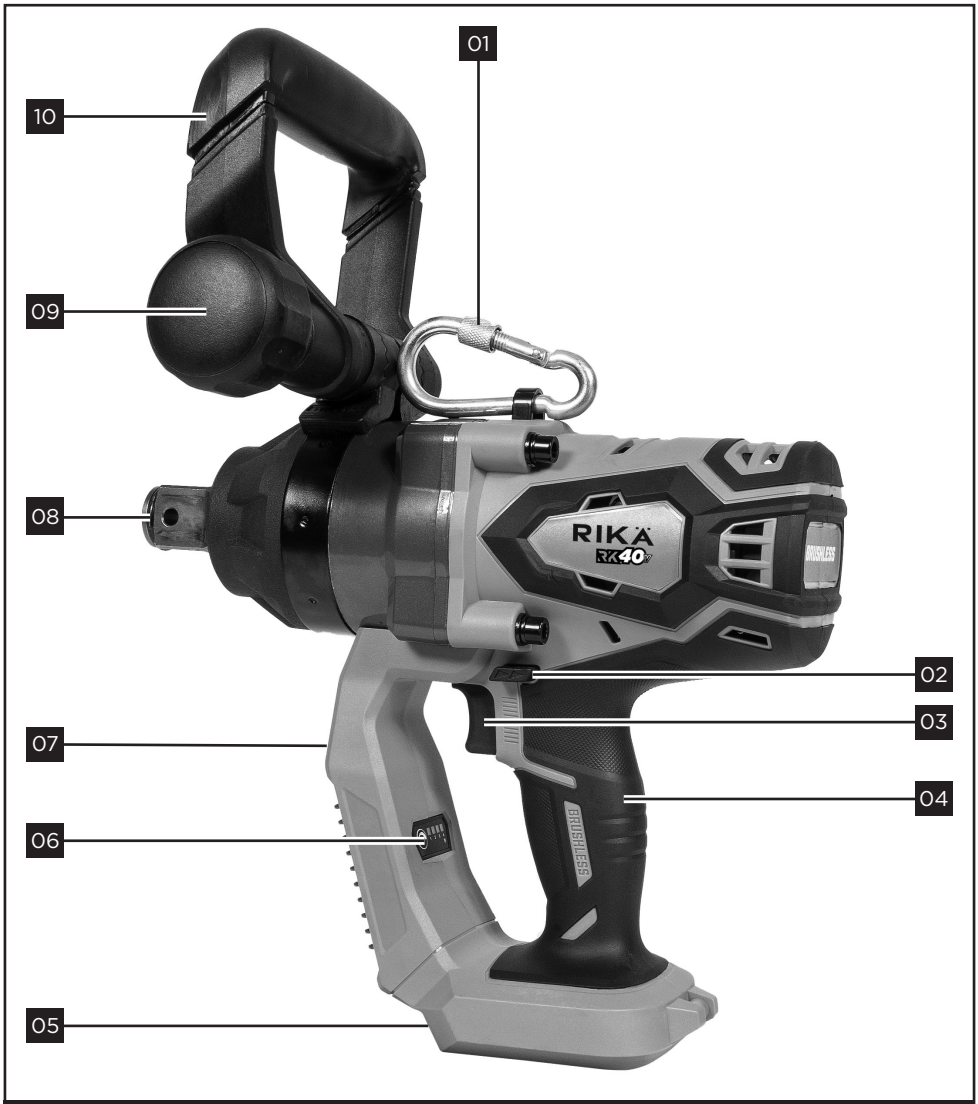

01. Carabiner locking clip
02. On/Off trigger
03. Forward/Reverse switch
04. Soft-grip handle
05. Battery mount
06. Drive control/Reverse control
07. LED worklight
08. Square anvil (1")
09. Auxiliary handle lock/unlock knob
10. Auxiliary handle

Unpacking

CAUTION. This packaging contains sharp objects. Take care when unpacking. Remove the machine, together with the accessories supplied, from the packaging. Check carefully to ensure that the machine is in good condition and account for all the accessories listed in this manual. Also make sure that all the accessories are complete.

If any parts are found to be missing, the machine and its accessories should be returned together in their original packaging to the retailer. Do not throw the packaging away, keep it safe throughout the guarantee period, then recycle if possible, otherwise dispose of it by the proper means. Do not let children play with empty plastic bags due to the risk of suffocation.

Assembly & Adjustments

WARNING! Do not use this product if it is not completely assembled or if any parts appear to be missing or damaged. Use of a product that is not properly and completely assembled or with damaged or missing parts could result in serious personal injury.

WARNING! Do not attempt to modify this product or create accessories or attachments not recommended for use with this product. Any such alteration or modification is misuse and could result in a hazardous condition leading to possible serious personal injury.

WARNING! To reduce the risk of injury, turn unit off and disconnect the battery pack from the machine before installing and removing accessories, before adjusting or changing setups or when making repairs. Be sure the forward/reverse switch is in the lock-off (centre) position. An accidental start-up can cause injury.

ATTACHING THE AUXILIARY HANDLE

CAUTION. Always use the auxiliary handle to ensure safe operation.

CAUTION. After installing or adjusting the auxiliary handle, make sure that the auxiliary handle is firmly secured.

To install the auxiliary handle loosen the auxiliary handle lock/unlock knob.

Slide the auxiliary handle ring over the front casing of the impact wrench until the round protrusions on the inside of the auxiliary handle ring sit inside the groove of the metal ring located behind the front casing, Fig.1.

A. Front casing
B. Metal ring
C. Auxiliary handle lock/unlock knob
D. Auxiliary handle ring

Tighten the auxiliary handle lock/unlock knob to secure the handle in place.

ROTATING THE AUXILIARY HANDLE

To rotate the auxiliary handle loosen the auxiliary handle lock/unlock knob.

Adjust the position of the auxiliary handle to the desired position by rotating the auxiliary handle to the left, right or top as shown in the Fig.2.

Tighten the auxiliary handle lock/unlock knob to secure the handle in place.

Assembly & Adjustments

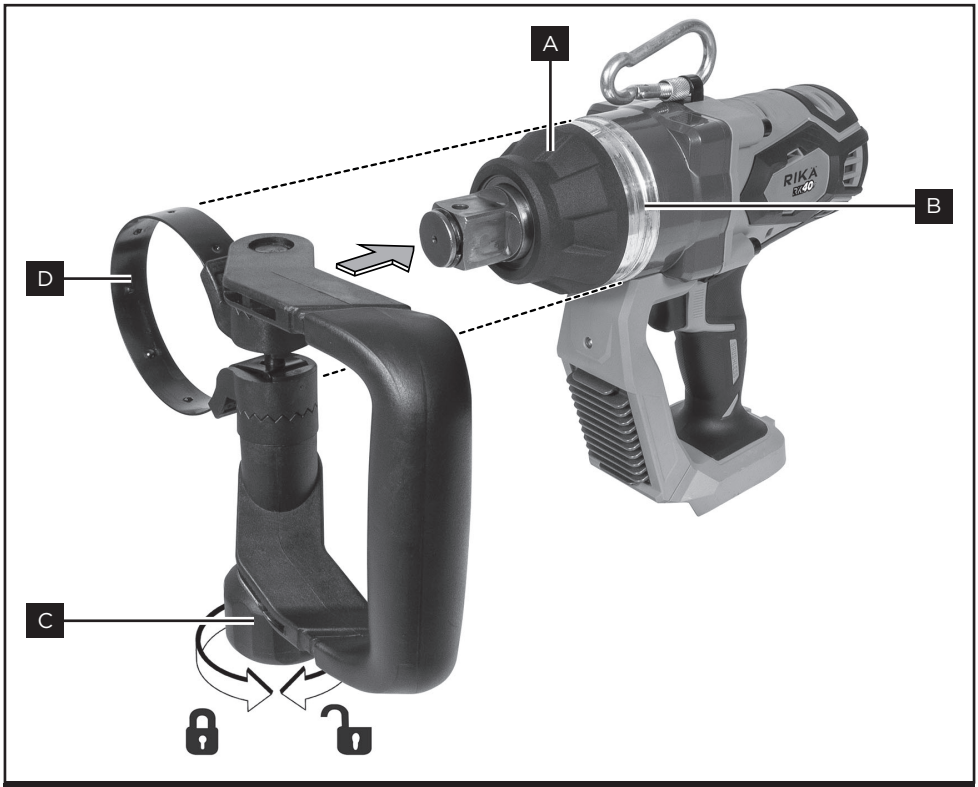

Fig.1

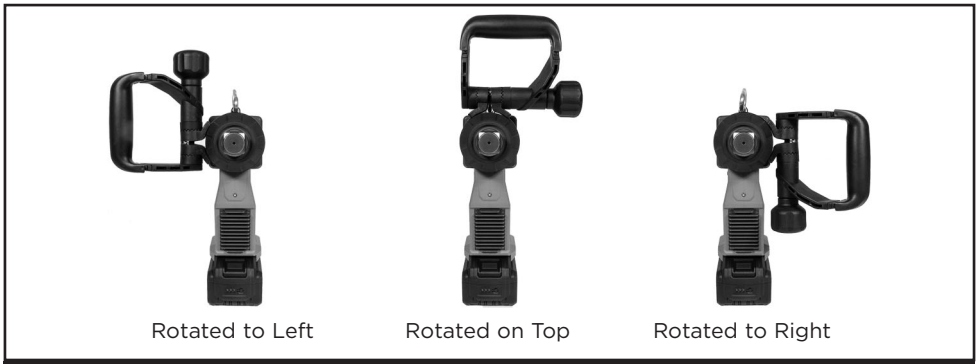

Fig.2

Assembly & Adjustments

ATTACHING AND REMOVING IMPACT SOCKETS WITH O-RING AND PIN (NOT SUPPLIED)

WARNING! Use only impact sockets. Non-impact sockets may break and cause a hazardous condition. Inspect the socket prior to use to ensure that it contains no cracks.

CAUTION. Make sure that the impact socket and the mounting portion are not damaged before installing the impact socket. Missing or damaged items should be replaced before use.

CAUTION. Pay attention that the impact socket is securely connected to the anvil. A poorly connected impact socket can come off during application.

Always use the correct size impact socket for bolts and nuts. An incorrect size impact socket will result in inaccurate and inconsistent fastening torque and/or damage to the bolt or nut.

Only use appropriate sized 3/4” (19.05mm) square drive impact sockets.

To secure an impact socket to the anvil use a 6 x 55mm O-ring and 5 x 45mm pin (not supplied)

Move the O-ring out of the groove in the impact socket and remove the pin from the impact socket. Fit the impact socket onto the square anvil so that the hole in the impact socket is aligned with the hole in the square anvil.

Insert the pin through the hole in the impact socket and square anvil. Then return the O-ring to the original position in the impact socket groove to retain the pin, Fig.3.

To remove the impact socket, follow the installation procedures in reverse.

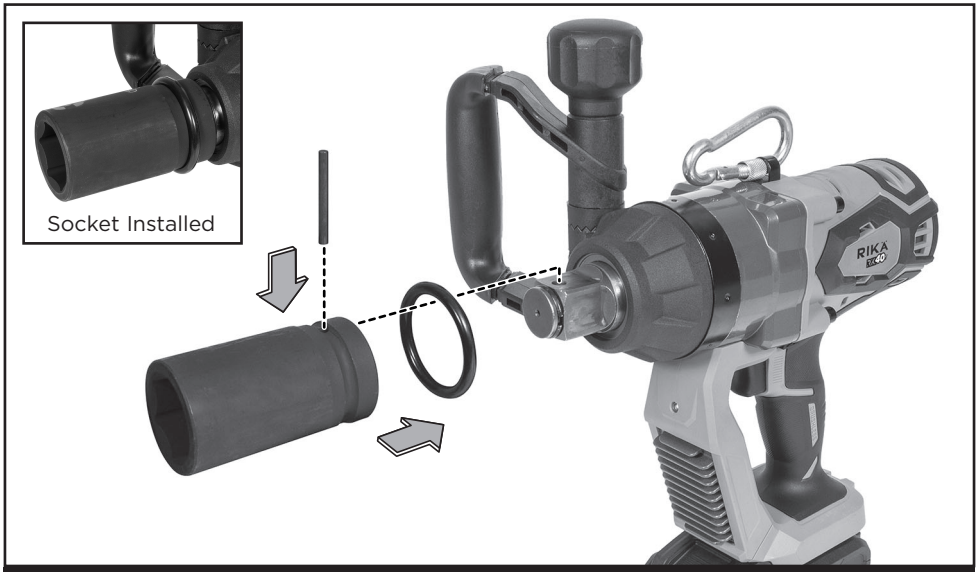

Fig.3

Assembly & Adjustments

INSTALLING A RIKA BATTERY PACK

WARNING! Always remove battery pack from your tool when you are assembling parts, making adjustments, cleaning, carrying, transporting or when not in use. Removing battery pack will prevent accidental starting that could cause serious personal injury.

Slide the battery pack into the battery mount, Fig.4.

Fig.4

NOTE: The battery has raised ribs which allows it to fit into the tool only one way. Make sure the battery pack snaps into place and that battery pack is secured in the tool before beginning operation. Improper installation of the battery pack can cause damage to internal components.

REMOVING THE BATTERY PACK

Locate the battery release catch on the top of the battery and press downwards, Fig.5. Whilst holding down the battery release catch slide the battery pack away from the tool.

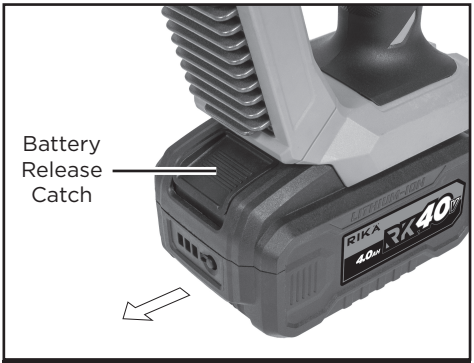

Fig.5

CARABINER LOCKING CLIP

CAUTION. Before using the ring, always make sure that the bracket and ring are secured and not damaged.

CAUTION. Use the hanging/ mounting parts for their intended purposes only. Using for unintended purposes may cause accident or personal injury.

WARNING! To reduce the risk of serious personal injury, ensure the knurled knob on the locking ring is fully tightened before hoisting the tool into the air.

The carabiner locking clip is convenient for hanging the tool with hoist.

Place a rope through the carabiner locking clip and then hang the tool up to the air with a hoist.

Assembly & Adjustments/Operation

To remove the carabiner locking clip loosen the knurled knob, push in the spring loaded bar and slide the clip out of the clip bracket, Fig.6.

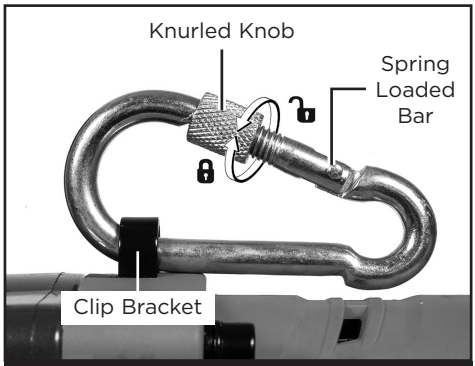

Fig.6

OPERATION

WARNING! To reduce the risk of serious personal injury, disconnect the battery pack from the tool before making any adjustments or removing/installing attachments or accessories.

CAUTION. When using the tool in high places, make sure that no one is below you. Dropping your tool from a height may cause serious injuries.

CAUTION. If the tool malfunctions or makes abnormal noises, stop using the tool. then contact your local RIKA Service Centre.

IMPORTANT. Verify the following every time the impact wrench is used:

1. Safety glasses, safety goggles, or face shield is being worn.
2. Hearing protection is being worn.
3. The socket is in good condition and is properly attached onto the anvil.

TURNING THE IMPACT WRENCH ON/OFF

CAUTION. Before installing the battery pack into the tool, always check to see that the On/Off trigger actuates properly and returns to the "OFF" position when released.

To start the machine squeeze the On/Off trigger, Fig. 7. Light pressure on the On/Off trigger results in low speed, allowing fastening to begin in a smooth, controlled manner.

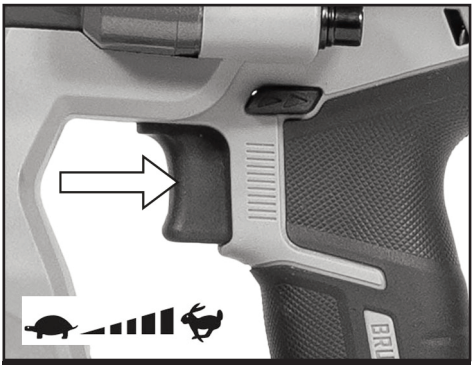
Fig.7

Further pressure on the switch results in an increase in speed.

NOTE: You may hear a high pitched noise from the switch during use. Do not be concerned; this is a normal part of the switch function.

To turn the tool off, release the On/Off trigger. Your tool is equipped with a brake. The anvil will stop when the On/Off trigger is fully released.

FORWARD AND REVERSE SWITCH

A forward/reverse switch determines the direction of the tool and also serves as a lock-off function.

Operation

This feature is selected via a slide switch located above the On/Off trigger, Fig.8.

Fig.8

To select direction of the impact wrench rotation simply push the switch fully in on the left side for reverse rotation. To change to forward rotation push the switch fully in on the right side of the handle.

NOTE: As a safety precaution from accidental engagement while being carried pushing the forward/reverse switch into the middle or lock-off position will render the impact wrench inoperative.

CAUTION. To prevent gear damage, always allow the anvil to come to a complete stop before changing the direction of rotation or selecting the lock-off function.

NOTE: The impact wrench will not run unless the forward/reverse switch is pushed fully to the left or right.

Avoid running the impact wrench at low speeds for extended periods of time. Running at low speeds under constant usage may cause the impact wrench to become overheated. If this occurs, cool the impact wrench by running it without a load and at full speed.

DRIVE/REVERSE CONTROL PANEL

The drive/reverse control panel is used to adjust the torque, rotation speed (rpm) and impact speed (bpm) for your chosen application. It also has two reverse modes (reverse auto stop and reverse).

SELECTING DRIVE CONTROL MODE:

1. Select forward rotation on the forward/reverse switch by pushing the switch fully in on the right side of the handle.
2. Pull and release the On/Off trigger to turn on the impact wrench. The current drive control mode will illuminate.
3. Press the button to cycle through the three drive control modes.

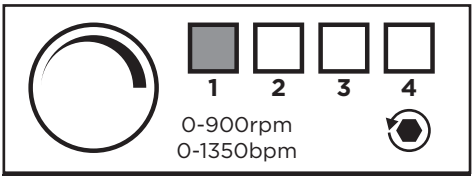

Drive Control Mode 1 (Green Light)

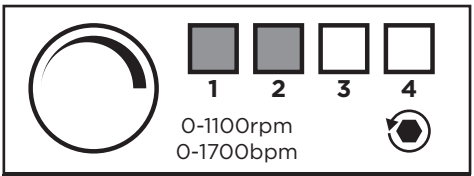

Drive Control Mode 2 (2 Green Lights)

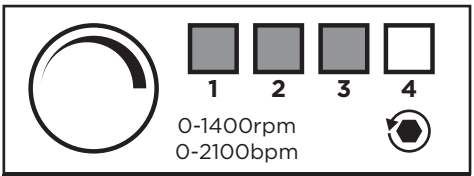

Drive Control Mode 3 (3 Green Lights)

Operation

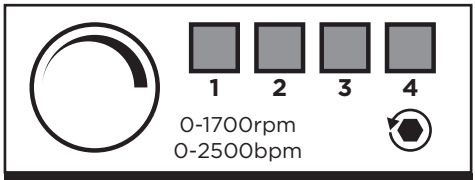

Drive Control Mode 4 (4 Green Lights)

4. When the desired mode indicator is illuminated, begin work.

SELECTING REVERSE MODE:

1. Select reverse rotation on the forward/reverse switch by pushing the switch fully in on the left side of the handle.
2. Pull and release the On/Off trigger to turn on the impact wrench.
3. Press the button to choose either reverse auto stop or reverse mode.

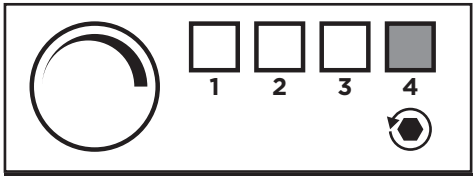

Reverse Auto Stop Mode (Red Light)

In reverse auto stop mode the anvil will spin until the nut breaks free from the joint and then will automatically stop working.

To continue removing a nut from a bolt press the button until reverse mode is selected.

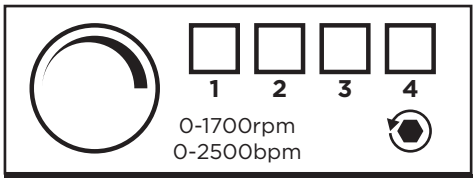

Reverse Mode (No Light)

Reverse mode will continue spinning at the above RPM and BPM until you release the On/Off trigger.

LED WORKLIGHT

CAUTION. Do not directly look into the source of light.

Pull the On/Off trigger to activate the LED worklight. The LED worklight will illuminate continuously while the On/Off trigger is being pulled. The LED worklight goes out 10 seconds after releasing the trigger.

NOTE: The worklight is for lighting the immediate work surface and is not intended to be used as a flashlight.

INSTRUCTIONS FOR USE

WARNING! Always observe the safety instructions and applicable regulations.

CAUTION. Always insert the battery cartridge all the way until it locks in place. Incorrect installation may result in the battery falling out of the tool, causing injury to you or someone around you.

PROPER HAND POSITION

WARNING! To reduce the risk of serious personal injury, ALWAYS hold securely in anticipation of a sudden reaction.

WARNING! To reduce the risk of serious personal injury, ALWAYS use proper hand position as shown in Fig.9. Proper hand position requires one hand on the soft grip handle and one hand on the auxiliary handle.

Operation

Fig.9

USAGE

Your impact wrench generates the following maximum torque: 2000Nm

CAUTION. Ensure fastener and/or system will withstand the level of torque generated by the tool. Excessive torque may cause breakage and possible personal injury.

Install the socket on the anvil. Hold the tool firmly and place the impact socket over the bolt or nut. Keep the tool pointed straight at the bolt or nut.

Press On/Off trigger to start operation. Release the On/Off trigger to stop operation. Always check torque with a torque wrench, as the fastening torque is affected by many factors including the following:

Voltage: Low voltage, due to a nearly discharged battery, will reduce fastening torque.

Socket size: Failure to use the correct socket size will cause a reduction in fastening torque.

Bolt/Screw Size: Larger bolt/screw diameters generally require higher fastening torque. Fastening torque will also vary according to length, grade, and torque coefficient.

Bolt/Screw: Ensure that all threads are free of rust and other debris to allow proper fastening torque.

Material: The type of material and surface finish of the material will affect fastening torque.

Fastening Time: Longer fastening time results in increased fastening torque. Using a longer fastening time than recommended could cause the fasteners to be overstressed, stripped or damaged.

CAUTION. If the tool is operated continuously, do not touch the front casing and square drive. The front casing and square drive may be extremely hot and could burn your skin.

IMPACTING TECHNIQUES

The longer a bolt, screw, or nut is impacted, the tighter it will become. To help prevent damaging the fasteners or workpieces, avoid excessive impacting.

Be particularly careful when impacting smaller fasteners because they require less impacting to reach optimum torque.

Practice with various fasteners, noting the length of time required to reach the desired torque. Check the tightness with a hand-torque wrench. If the fasteners are too tight, reduce the impacting time. If they are not tight enough, increase the impacting time.

Oil, dirt, rust or other matter on the threads or under the head of the fastener affects the degree of tightness.

Operation

The torque required to loosen a fastener averages 75% to 80% of the tightening torque, depending on the condition of the contacting surfaces.

On light gasket jobs, run each fastener down to a relatively light torque and use a hand torque wrench

Maintenance

WARNING! Always be sure that the tool is switched off and the battery pack is removed before attempting to perform inspection or maintenance.

This power tool normally requires no maintenance; from time to time the ventilation slots on the motor casing should be cleaned out. If the unit should become defective, repair should be performed by an authorised service agent for electric tools.

The tool may be cleaned most effectively with compressed dry air. Always wear safety goggles when cleaning tools with compressed air.

Ventilation openings and switch levers must be kept clean and free of foreign matter. Do not at tempt to clean by inserting pointed objects through openings.

Avoid using solvents when cleaning plastic parts. Most plastics are susceptible to damage from various types of commercial solvents and may be damaged by their use. Use clean cloths to remove dirt, dust, oil, grease, etc.

WARNING! Do not at any time let brake fluids, gasoline, petroleum based products, penetrating oils, etc., come in contact with plastic parts. Chemicals can damage, weaken or destroy plastic which may result in serious personal injury.

Electric tools used on fibreglass material, wallboard, spackling compounds, or plaster are subject to accelerated wear and possible premature failure because the fibreglass chips and grindings are highly abrasive to bearings, brushes, commutators, etc. Consequently, we do not recommended using this tool for extended work on these types of materials. However, if you do work with any of these materials, it is extremely important to clean the tool using compressed air.

Always store your power tool in a dry place.

Occasionally you may see sparks through the ventilation slots. This is normal and will not damage your power tool.

WARNING! Always wear safety goggles or safety glasses with side shields during power tool operation or when blowing dust. If operation is dusty, also wear a dust mask.

LUBRICATION

All of the bearings in this tool are lubricated with a sufficient amount of high grade lubricant for the life of the unit under normal operating conditions. Therefore, no further lubrication is required.

Service

Now that you have purchased your tool, should a need ever exist of repair or service, simply contact your nearest RIKA Authorised Service Centre or other qualified service organisation. Be sure to provide all pertinent facts when you call or visit.

Environmental Protection

Information for (private householders) for the environmentally responsible disposal of Waste Electrical and Electronic Equipment (WEEE)

This symbol on products and or accompanying documents indicates that used and end of life electrical and electronic equipment should not be disposed of in household waste. For the proper disposal, treatment, recovery and recycling, please take these products to designated collection points, where they will be accepted on a free of charge basis. Alternatively, in some countries you may be able to return your products to your retailer upon the purchase of an equivalent new product. Disposing of this product correctly will help to save valuable resources and prevent any potential adverse effects on human health and the environment which could otherwise arise from inappropriate waste disposal and handling. Please contact your local authority for further details of your nearest designated collection point. Penalties may be applicable for incorrect disposal of this waste in accordance with national legislation.

FOR BUSINESS USERS IN THE EUROPEAN UNION.
If you wish to discard electrical and electronic equipment, please contact your dealer or supplier for further information.

Information on Disposal in other Countries outside the European Union.
This Symbol is only valid in the European Union.
If you wish to dispose of this product, please contact your local authorities or dealer and ask for the correct method of disposal.

Notes

Notes

EC Declaration of Conformity

1. **Product model:** RK40HIWF1

2. **Name and address of the manufacturer or his authorised representative:**

RIKÄ

SGS Engineering (UK) Ltd
Unit 1 West Side Park, Raynesway,
Derby, DE21 7AZ

3. **This declaration of conformity is issued under the sole responsibility of the manufacturer.**

4. **Object of the declaration:**

   Equipment: 40V Cordless Impact Wrench
   Brand name: RIKA
   Model/type: RK40HIWF1

5. **The object of the declaration described above is in conformity with the relevant statutory requirements:**

Supply of Machinery (Safety) Regulations 2008 Electrical Equipment (Safety) Regulations 2016 Electromagnetic Compatibility Regulations 2016 The Restriction of the Use of Certain Hazardous Substances in Electrical and Electronic Equipment Regulations 2012

6. **References to the relevant designated standards used or references to the other technical specifications in relation to which conformity is declared:**

BS EN55014-1	BS EN62841-1
BS EN55014-2	BS EN62841-2-2

7. **The person authorised to compile the technical file:**

   Name: Neil Sansom
   Address: SGS Engineering (UK) Ltd, Unit 1 West Side Park, Raynesway, Derby, DE21 7AZ

   Signed for and on behalf of:

   Authorised Representative

   Neil Sansom, CEO
   Date: 20/02/2026

UK CA 26